CI/SfB

(13.9) Rn6 (M2)

Xtratherm Limited
Kells Road
Navan
Co Meath
Ireland
Tel: 00 353 46 9066000 Fax: 00 353 46 9066090
e-mail: info@xtratherm.com
website: www.xtratherm.com

Agrément Certificate No 03/4051

Designated by Government to issue European Technical Approvals

XTRATHERM THIN-R UNDERFLOOR BOARD (XT/UF AND XT^{B}/UF)

Isolation pour planchers en béton
Wärmedämmung für Betonfußboden

Product

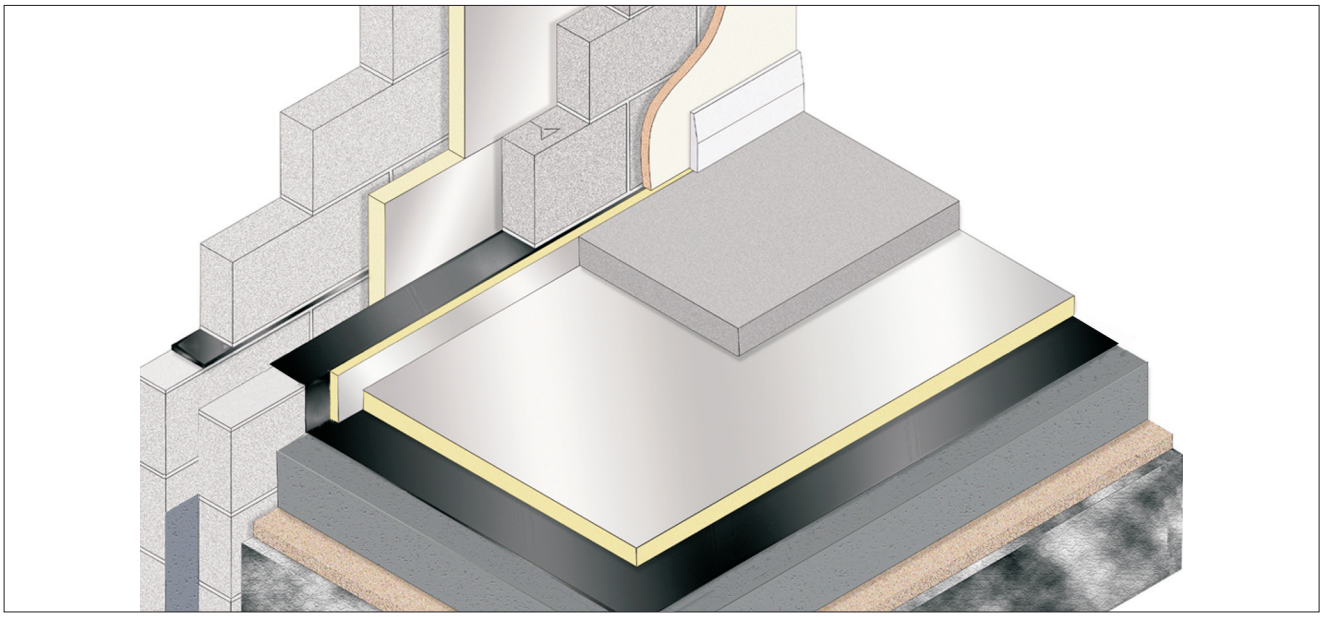

- *THIS CERTIFICATE OF CONFIRMATION RELATES TO XTRATHERM THIN-R UNDERFLOOR BOARD (XT/UF AND XT^{B}/UF), A RIGID POLYISOCYANURATE-MODIFIED POLYURETHANE FOAM BOARD WITH FOIL FACINGS ON BOTH SIDES.*
- *The product is for use on ground-supported or suspended concrete ground floors, and is also suitable for use between the joists of a suspended timber floor.*
- *The product is used to reduce the thermal transmittance of new or existing floors of dwellings or buildings of similar occupancy, type and condition.*

continued

Regulations

1 The Building Regulations 2000 (as amended) (England and Wales)

The Secretary of State has agreed with the British Board of Agrément the aspects of performance to be used by the BBA in assessing the compliance of floor insulation with the Building Regulations. In the opinion of the BBA, Xtratherm Thin-R Underfloor Board (XT/UF and XT^{B}/UF), if used in accordance with the provisions of this Certificate, will meet or contribute to meeting the relevant requirements.

Requirement:	L1	Dwellings
Requirement:	L2	Buildings other than dwellings
Comment:		The product can enable, or contribute to enabling, a floor to meet these Requirements. See sections 11.2 and 11.3 of this Certificate.
Requirement:	Regulation 7	Materials and workmanship
Comment:		The product is acceptable. See section 13 of this Certificate.

continued

• *It is essential that the floors comply with the conditions set out in the* Design Data *and* Installation *parts of this Certificate.*

Confirmation of IAB Certificate No 03/0185 issued by the Irish Agrément Board, NSAI, Glasnevin, Dublin 9, Ireland to Xtratherm Limited.

2 The Building Standards (Scotland) Regulations 1990 (as amended)

In the opinion of the BBA, Xtratherm Thin-R Underfloor Board (XT/UF and XT^{B}/UF), if used in accordance with the provisions of this Certificate, will satisfy or contribute to satisfying the various Regulations and related Technical Standards as listed below.

Regulation:	10	Fitness of materials and workmanship
Standard:	B2.1	Selection and use of materials, fittings, and components, and workmanship
Comment:		The product can contribute to a construction meeting this Standard. See the *Installation* part of this Certificate.
Standard:	B2.2	Selection and use of materials, fittings, and components, and workmanship
Comment:		The product is an acceptable material. See section 13 of this Certificate.
Regulation:	18	Resistance to condensation
Standard:	G4.1	Condensation — Interstitial condensation
Standard:	G4.2	Condensation — Surface condensation
Comment:		Floors incorporating the product can satisfy these Standards. See section 10.1 of this Certificate.
Regulation:	22	Conservation of fuel and power
Standard:	J3.1	Buildings in purpose group 1 — Building fabric
Standard:	J8.1	Buildings in purpose groups 2 to 7
Comment:		The product can satisfy these Standards. See sections 11.2 and 11.3 of this Certificate.
Standard:	J4.1	Buildings in purpose group 1 — Limiting thermal bridging at junctions and around openings
Standard:	J9.1	Buildings in purpose groups 2 to 7 — Limiting thermal bridging at junctions and around openings
Comment:		The product can contribute to a construction meeting these Standards. See sections 11.2 and 11.3 of this Certificate.

3 The Building Regulations (Northern Ireland) 2000

In the opinion of the BBA, Xtratherm Thin-R Underfloor Board (XT/UF and XT^{B}/UF), if used in accordance with the provisions of this Certificate, will satisfy, or contribute to satisfying, the various Building Regulations as listed below.

Regulation:	B2	Fitness of materials and workmanship
Comment:		The product is acceptable. See section 13 of this Certificate.
Regulation:	C5	Condensation
Comment:		Floors incorporating the product can satisfy this Regulation. See section 10.1 of this Certificate.
Regulation:	F2	Building fabric
Comment:		The product can satisfy this Regulation. See sections 11.2 and 11.3 of this Certificate.

4 Construction (Design and Management) Regulations 1994 (as amended)
Construction (Design and Management) Regulations (Northern Ireland) 1995 (as amended)

Information in this Certificate may assist the client, planning supervisor, designer and contractors to address their obligations under these Regulations.

See section: 6 *Delivery and site handling* (6.3).

Technical Specification

5 Description

5.1 Xtratherm Thin-R Underfloor Board (XT/UF and XT^B/UF) comprises a rigid polyisocyanurate foam core, sandwiched with trilaminate aluminium foil facings on both sides. The nominal characteristics are:

length (mm)	2400
width (mm)	1200
thickness (mm)(1)	25 to 75
edge profile	square
minimum compressive strength at 10% compression (kPa)	150
nominal density (kgm^{-3})	30

(1) Other sizes available subject to quantity.

5.2 The boards are manufactured in accordance with section 4.2 and the relevant parts of section 4.3 of BS EN 13165 : 2001. The XT/UF grade board does not contain CFC or HCFC gases and has zero ozone depletion potential. The XT^B/UF grade board does not contain CFC gas.

6 Delivery and site handling

6.1 The boards are delivered to site in polyethylene shrink-wrapped packs incorporating a label with the manufacturer's trade name, product description and characteristics, and the BBA identification mark incorporating the number of this Certificate.

6.2 The boards must be protected from prolonged exposure to sunlight and should be stored either under cover or protected with opaque polythene. Where possible, packs should be stored inside. If stored outside, the products should be raised above ground level, and not in contact with ground moisture.

6.3 The boards must not be exposed to open flame or other ignition sources.

Design Data

7 General

7.1 Xtratherm Thin-R Underfloor Board is effective in reducing the U value (thermal transmittance) of new or existing ground floors.

7.2 Ground-supported concrete floors incorporating the boards must include a suitable damp-proof membrane laid in accordance with the relevant clauses of CP 102 : 1973, BS 8102 : 1990 and/or BS 8215 : 1991 (see section 9 of this Certificate).

7.3 Suspended ground floors incorporating the boards must include a damp-proof membrane or suitable ventilation of the sub-floor as appropriate (see section 9 of this Certificate).

7.4 The overlay to the boards should be:

- a cement-based floor screed laid in accordance with the relevant clauses of BS 8204-1 : 2002 and/or BS 8204-2 : 2002, or
- flooring grade particle board type P5 or P7, OSB/3 or OSB/4 in accordance with BS 7916 : 1998
- a concrete slab.

8 Behaviour in relation to fire

8.1 The boards do not prejudice the fire resistance properties of the floor.

8.2 When properly installed, the boards will not add significantly to any existing fire hazard. The boards will be contained within the floor by the overlay until the overlay itself is destroyed. Therefore, the boards will not contribute to the development stages of a fire or present a smoke or toxic hazard.

9 Moisture penetration

9.1 The boards are not a water vapour control layer. However, they will not allow moisture to cross the completed floor construction.

9.2 For floors subject to national Building Regulations, construction should be as detailed or designed in accordance with:

England and Wales

Approved Document C, Technical Solutions 3.4 to 3.8, or 3.9 to 3.11 or 3.13 to 3.14

Scotland

Technical Standards (G2.3), (G2.5) and (G2.6), Sections A (above dpm), B, C or D

Northern Ireland

Technical Booklet C, Section 1.

10 Condensation

10.1 For floors subject to national Building Regulations, construction should be in accordance with BS 5250 : 2002, clause 8.5, and favourably assessed in accordance with Annex D.

10.2 The boards have a vapour resistivity exceeding 100 MNsg^{-1}m^{-1}.

11 Thermal insulation

11.1 For the purpose of U value calculations to determine if the requirements of the Building (or other statutory) Regulations are met, the thermal conductivity λ 90/90 value of the insulation may be taken as declared by the Certificate holder, and shown in Table 1.

Table 1 Thermal conductivity (λ 90/90 values)

Grade	Thermal conductivity (Wm^{-1}K^{-1})
XT/UF	0.023
XT^B/UF	0.019

11.2 The requirement for limiting heat loss through the building fabric can be satisfied if U values of the building elements, including thermal bridging, do not exceed the maximum values in the relevant Elemental Method given in the national Building Regulations:

England and Wales

Approved Documents L1 and L2, Table 1

Scotland

Technical Standards J3.2, Table 1, and J8.3, Table

Northern Ireland

Technical Booklet F, Tables 1.2 and 1.4.

11.3 Guidance is also given in these documents on selecting the thickness of insulation required to enable a floor to achieve the desired U value. Alternative approaches to the Elemental Method are described which allow for some flexibility in design of U values for individual constructional elements.

11.4 U values for floors may be calculated in accordance with CIBSE Guide A3 : 1999 or BS EN ISO 13370 : 1998 [see also BR 262 (2002) *Thermal insulation — avoiding risks*].

12 Floor loading

12.1 The design loadings for self-contained dwelling units, as defined in BS 6399-1 : 1996, are:

distributed load (kPa)	1.5
concentrated load (kN)	1.4

12.2 The boards, covered with screed, can support these design loadings without undue compression deflection of the insulant.

12.3 A BRE survey of imposed floor loading in domestic buildings (see BRE current paper No 2/77 *Floor loadings in domestic buildings — the results of a survey*), indicates that loadings in flats are commonly in the region of 0.6 kPa and loadings of 1.5 kPa are normally associated with fixed items.

12.4 Where the boards are used under a concrete slab, resistance to concentrated and distributed loads is a function of the slab specification.

13 Durability

The boards are rot-proof, dimensionally stable and, when installed with the overlays specified in this Certificate, will remain effective as an insulating material for the life of the building in which they are incorporated.

Installation

14 General

14.1 Installation of Xtratherm Thin-R Underfloor Board must be in accordance with the Certificate holder's installation instructions and the requirements of this Certificate.

14.2 Typical methods are shown in Figures 1 to 7. Reference should also be made to BRE document BR 262 (2002) *Thermal insulation — avoiding risks*.

Figure 1 Ground-supported concrete floor — screed overlay

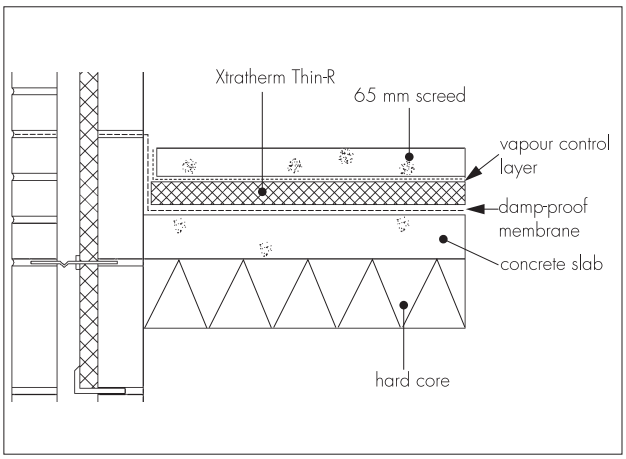

Figure 2 Suspended concrete floor — screed overlay

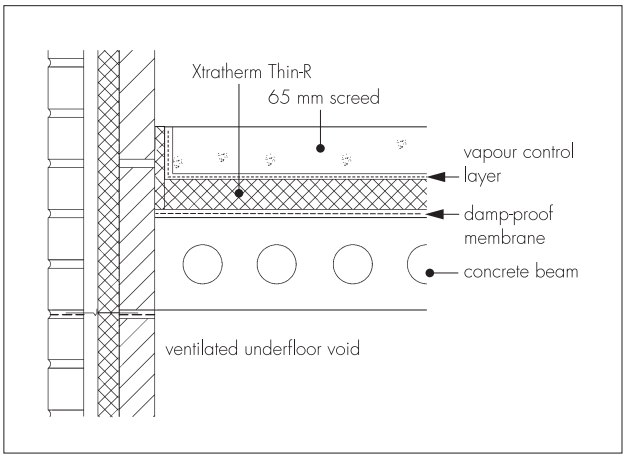

Figure 3 Concrete slab overlay

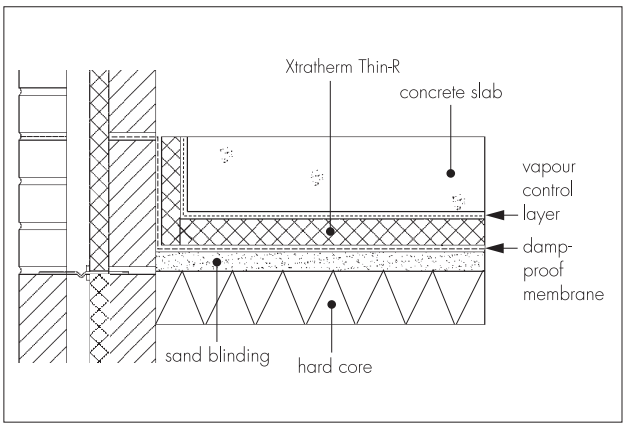

14.3 All floor surfaces should be smooth, level and flat to within 5 mm when measured with a 3-metre straight-edge. Irregularities greater than this must be removed. Minor irregularities (up to 10 mm deep) may be levelled with mortar or thin screed.

14.4 In ground-supported concrete floors (see Figures 1 and 3), the concrete floor slab over which the boards are laid should be left for as long as possible to maximise drying out and dissipation of constructional moisture, in accordance with BS 8203 : 2001, Section 3.1.2.

14.5 Where the boards are used over ground-supported concrete floor slabs a suitable damp-proof membrane in accordance with BS 8102 : 1990, should be laid to resist moisture from the ground. If a liquid-type damp-proof membrane is applied to the slabs, it should be of a type compatible with the boards and be allowed to dry out fully, prior to installation.

14.6 Where the boards are used on hard core bases under ground-supported concrete slabs, the hard core must be compacted and blinded before application of the boards.

14.7 The boards can be used on beam and block (see Figure 2) suspended concrete floors, that are the subject of a current Agrément Certificate and installed in accordance with, and within the limitations imposed by that Certificate, or those designed and installed to the precast concrete and general loading codes, that have been assessed as suitable.

14.8 Where a screed or concrete slab is laid over the product, vertical upstands of insulation should be provided and be of sufficient depth to fully separate the screed or slab from the wall. If used, a suitable partial fill cavity wall insulation material can be extended below the damp-proof course level to provide edge insulation to the floor.

14.9 During construction, the boards and overlays must be protected from damage by traffic and moisture sources, such as water spillage and plaster droppings.

15 Procedure

15.1 The boards are cut to size, as necessary, with a fine-tooth saw or a knife and laid with closely-butted, staggered cross-joints, ensuring that all spaces are completely filled. Care must be taken to ensure that the insulation fits tightly at the edges and around any service penetrations.

15.2 The laying pattern should ensure that all cut edges are at the perimeter of the floor or some other feature, eg mat wells, thresholds or access ducts. Spreader boards should be used to protect the boards.

Particle board and oriented strand board (OSB) overlays (Figures 4, 5 and 6)

Figure 4 Ground-supported concrete floor — board overlay

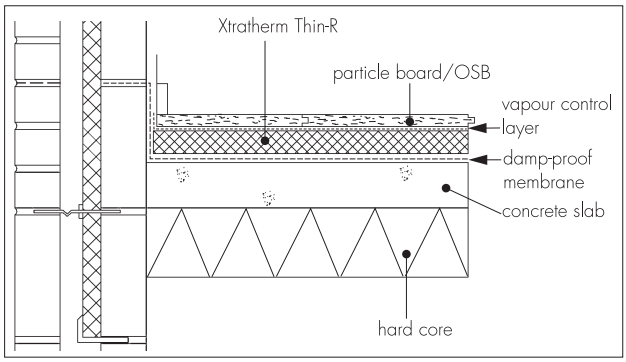

Figure 5 Suspended concrete floor — board overlay

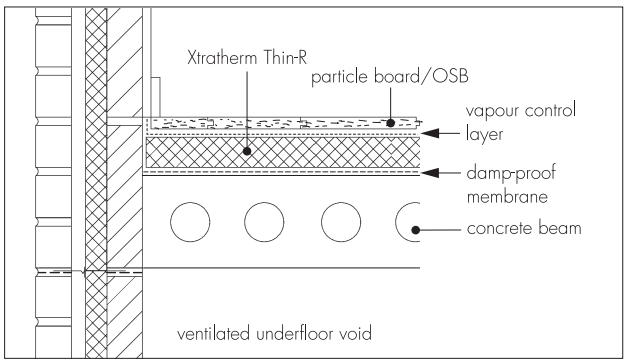

Figure 6 Ground-supported blinded hard core — board overlay

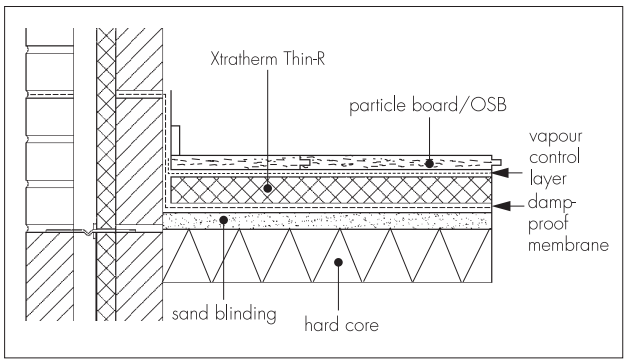

15.3 Before laying the particle board or OSB overlays, preservative-treated battens, in accordance with BS 1282 : 1999, are positioned at doorways, access panels and to support partitions. Adequate time should be allowed for CCA-based preservatives to be fixed and the solvents from solvent-based preservatives to evaporate.

15.4 The insulation boards are laid on a dpm, a vapour control layer of polythene sheet with a minimum thickness of 0.25 mm (1000 gauge), is laid between the insulation boards and the overlay boards. The polythene sheet has 150 mm overlaps taped at the joints and is turned up 100 mm at the walls.

15.5 Tongue-and-groove overlay boards are laid with staggered cross-joints.

15.6 An expansion gap between the overlay board and the perimeter walls should be provided at the rate of 2 mm per metre run or a minimum of 10 mm, whichever is the greater.

15.7 Where there are long, uninterrupted lengths of floor, eg corridors, proprietary expansion joints should be installed at intervals on the basis of a 2 mm gap per metre run of overlay board.

15.8 Before the overlay boards are interlocked, a waterproof PVA adhesive is applied to the joints.

15.9 Once the overlay board is laid, temporary wedges are inserted between the walls and the floor to maintain tight joints until the adhesive has set.

15.10 Where there is a likelihood of regular water spillage, eg in rooms such as kitchens, bathrooms, shower and utility rooms, additional particle board protection should be considered, eg by a continuous flexible vinyl sheet flooring, with welded joints, turned up at abutments and cove skirting.

Timber floors

15.11 Saddle clips are placed at intervals not exceeding one metre along the timber floor joists. Where the boards are to be installed only on one side of a joist, twin clips can be cut into single clips and nailed into place with galvanized nails (see Figure 7).

Figure 7 Suspended timber floors

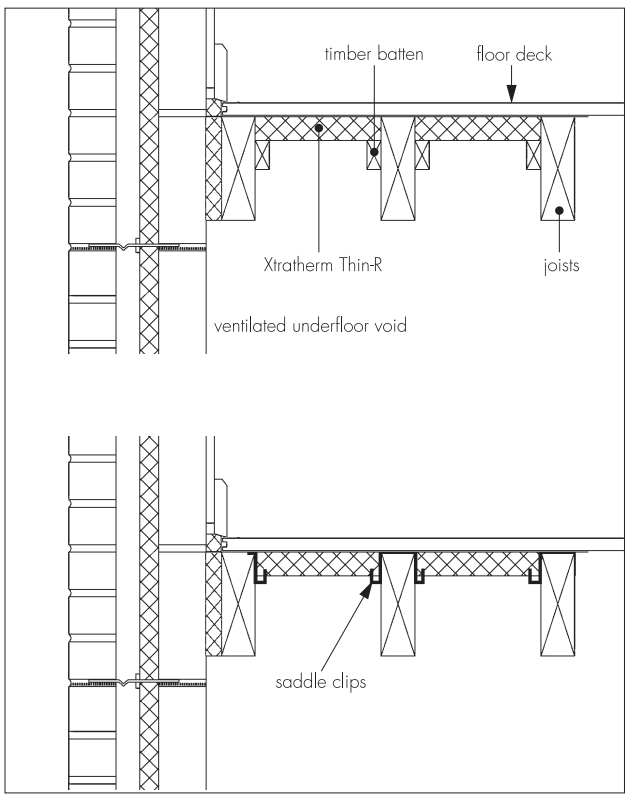

15.12 If the saddle clips are not used, the boards may be retained by preservative-treated timber battens (see Figure 7). Beads should be wide enough to retain the boards in place and secured in place with corrosion protected nails at a depth that will accommodate the thickness of the insulation board.

15.13 Boards are cut to fit between joists and pushed down onto the spikes of the saddle clips, or onto the beads. Small gaps should be insulated with cut strips of insulation.

Cement-based screed overlay (Figures 1 and 2)

15.14 A polythene vapour control layer, minimum 0.125 mm thick, is laid over the boards with 150 mm laps. A properly-compacted screed of minimum thickness 65 mm is then laid over. The relevant clauses of BS 8204-1 : 2002 should be followed and BRE Digest 224(1981) *Cellular Plastics for Buildings. Floors* and BRE Digest 104(1979) *Floor Screeds* should be consulted.

Concrete slab overlay (ground bearing only)

15.15 Perimeter edge pieces are cut and placed around the edges and taped at joints. A vapour control layer, minimum 0.125 mm thick, is laid over the boards with 150 mm laps. The concrete slab is laid to the required thickness.

16 Incorporation of services

16.1 The maximum continuous working temperature of the boards is 100°C. Derating of electrical cables should be considered where installation restricts air cooling of cables.

16.2 Where the boards are installed on a floor of a suspended beam and block design, all services must be installed in accordance with the Agrément Certificate for that floor and/or with the relevant current codes of practice.

16.3 Where possible, electrical conduits, gas and water pipes or other services should be contained within an accessible duct or channel within the concrete slab. Where this is not possible, the services may be accommodated within the insulation, provided they are securely fixed to the concrete slab (see section 8.2 of this Certificate). Electric cables should be enclosed in a suitable conduit. With hot pipes the insulation must be cut back to maintain an air space.

16.4 Where water pipes are installed below the insulation they should be pre-lagged. Generally insulation will be relatively thin so it would not be possible to install pipes within the insulation.

16.5 On intermediate/exposed floors all the services should be incorporated beneath the existing floor, above the insulation where possible.

16.6 On board overlay floors, in situations where access to the services is desirable, a duct may be formed by mechanically fixing, to the floor, timber bearers of the same thickness as the insulation to provide support for a particle board cover. The duct should be as narrow as possible and not exceed 400 mm in width or the maximum particle board spans given in BS 7916 : 1998 without intermediate support. Services should be suitably fixed to the floor base and not to the insulation boards (see section 11.2 of this Certificate with regard to limiting heat loss).

Technical Investigations

The following is a summary of the technical investigations carried out on Xtratherm Thin-R Underfloor Board (XT/UF and XT^B/UF).

17 Tests

Tests were carried out by the BBA in accordance with BS EN 13165 : 2001 to determine:

- density
- water vapour transmission
- long-term water absorption
- dimensional accuracy
- dimensional stability
- compressive and cross-breaking strength
- thermal conductivity.

18 Investigations

18.1 The manufacturing process was examined, including the methods adopted for quality control, and details were obtained of the quality and composition of the materials used.

18.2 An examination was made of test data to BS EN 13165 : 2001 relating to:

- dimensions
- squareness
- flatness
- density
- λ value
- compressive strength at 10% compression.

18.3 The technical data in the Agrément issued by the Irish Agrément board were evaluated in the context of UK practice, conditions and building regulations.

Additional Information

- The management systems of Xtratherm Limited have been assessed and registered as meeting the requirements of EN ISO 9001 : 2000 by SGS United Kingdom Ltd (Certificate No GB 03/59360).
- Xtratherm Limited has declared the designation codes (see Table 2) in accordance with Section 6 of BS EN 13165 : 2001.

Table 2 Certificate holder's declared designation codes/level or class — BS EN 13165 : 2001

Characteristic	Code/value
thickness	T1
compressive stress at 10% deformation	CS(10)150
dimensional stability at:	
70°C/90% RH –20°C	DS(70.90)6
water absorption by immersion total (%)	WL(T)2
flatness after one-sided wetting	FW2
thermal conductivity 90/90 ($Wm^{-1}K^{-1}$)	
XT^B/UF	0.019
XT/UF	0.023

Bibliography

BS 1282 : 1999 *Wood preservatives — Guidance on choice, use and application*

BS 5250 : 2002 *Code of practice for control of condensation in buildings*

BS 6399-1 : 1996 *Loading for buildings — Code of practice for dead and imposed loads*

BS 7916 : 1998 *Code of practice for the selection and application of particleboard, oriented strand board (OSB), cement bonded particleboard and wood fibreboards for specific purposes*

BS 8102 : 1990 *Code of practice for protection of structures against water from the ground*

BS 8203 : 2001 *Code of practice for installation of resilient floor coverings*

BS 8204-1 : 2002 *Screeds, bases and in-situ floorings — Concrete bases and cement sand levelling screeds to receive floorings — Code of practice*

BS 8204-2 : 2002 *Screeds, bases and in-situ floorings — Concrete wearing surfaces — Code of practice*

BS 8215 : 1991 *Code of practice for design and installation of damp-proof courses in masonry construction*

BS EN 13165 : 2001 *Thermal insulation products for buildings — Factory made rigid polyurethane foam (PUR) products — Specification*

BS EN ISO 13370 : 1998 *Thermal performance of buildings — Heat transfer via the ground — Calculation methods*

CP 102 : 1973 *Code of practice for protection of buildings against water from the ground*

EN ISO 9001 : 2000 *Quality management systems — Requirements*

Conditions of Certification

19 Conditions

19.1 This Certificate:

(a) relates only to the product that is described, installed, used and maintained as set out in this Certificate;

(b) is granted only to the company, firm or person identified on the front cover — no other company, firm or person may hold or claim any entitlement to this Certificate;

(c) has to be read, considered and used as a whole document — it may be misleading and will be incomplete to be selective;

(d) is copyright of the BBA.

19.2 References in this Certificate to any Act of Parliament, Regulation made thereunder, Directive or Regulation of the European Union, Statutory Instrument, Code of Practice, British Standard, manufacturers' instructions or similar publication, shall be construed as references to such publication in the form in which it was current at the date of this Certificate.

19.3 This Certificate will remain valid for an unlimited period provided that the product and the manufacture and/or fabricating process(es) thereof:

(a) are maintained at or above the levels which have been assessed and found to be satisfactory by the BBA;

(b) remain covered by a valid Irish Agrément; and

(c) are reviewed by the BBA as and when it considers appropriate.

19.4 In granting this Certificate, the BBA makes no representation as to:

(a) the presence or absence of any patent or similar rights subsisting in the product or any other product;

(b) the right of the Certificate holder to market, supply, install or maintain the product; and

(c) the nature of individual installations of the product, including methods and workmanship.

19.5 Any recommendations relating to the use or installation of this product which are contained or referred to in this Certificate are the minimum standards required to be met when the product is used. They do not purport in any way to restate the requirements of the Health & Safety at Work etc Act 1974, or of any other statutory, common law or other duty which may exist at the date of this Certificate or in the future; nor is conformity with such recommendations to be taken as satisfying the requirements of the 1974 Act or of any present or future statutory, common law or other duty of care. In granting this Certificate, the BBA does not accept responsibility to any person or body for any loss or damage, including personal injury, arising as a direct or indirect result of the installation and use of this product.

BBA BRITISH BOARD OF AGRÉMENT
TECHNICAL APPROVALS FOR CONSTRUCTION

In the opinion of the British Board of Agrément, Xtratherm Thin-R Underfloor Board (XT/UF and XT^{B}/UF) is fit for its intended use provided it is installed, used and maintained as set out in this Certificate. Certificate No 03/4051 is accordingly awarded to Xtratherm Limited.

On behalf of the British Board of Agrément

Date of issue: 8th October 2003

Chief Executive

British Board of Agrément
P O Box No 195, Bucknalls Lane
Garston, Watford, Herts WD25 9BA
Fax: 01923 665301

©2003

e-mail: mail@bba.star.co.uk
website: www.bbacerts.co.uk

BBA BRITISH BOARD OF AGRÉMENT

For technical or additional information, contact the Certificate holder (see front page).
For information about the Agrément Certificate, including validity and scope, tel: Hotline 01923 665400, or check the BBA website.